Screw-on Hinge

stainless steel

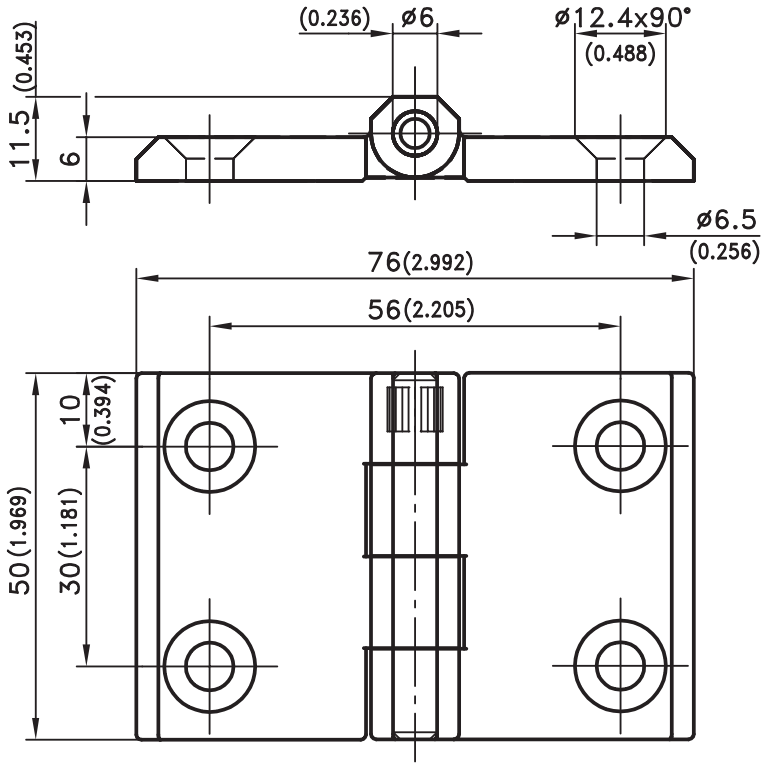

Part No. **218-9306**

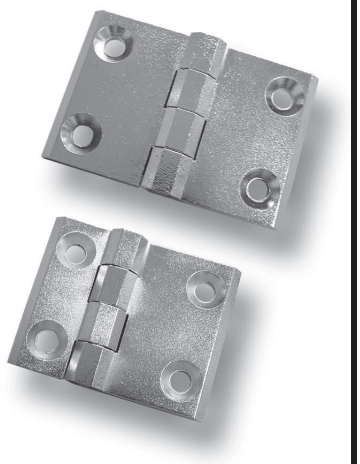

Screw-on Hinge for HD-application.

- RH or LH application.
- Allowing application around corner.
- Opening angle up to 270°.
- For countersunk screws M6 to DIN 7991.
- The surface of the hinge is satin polished.

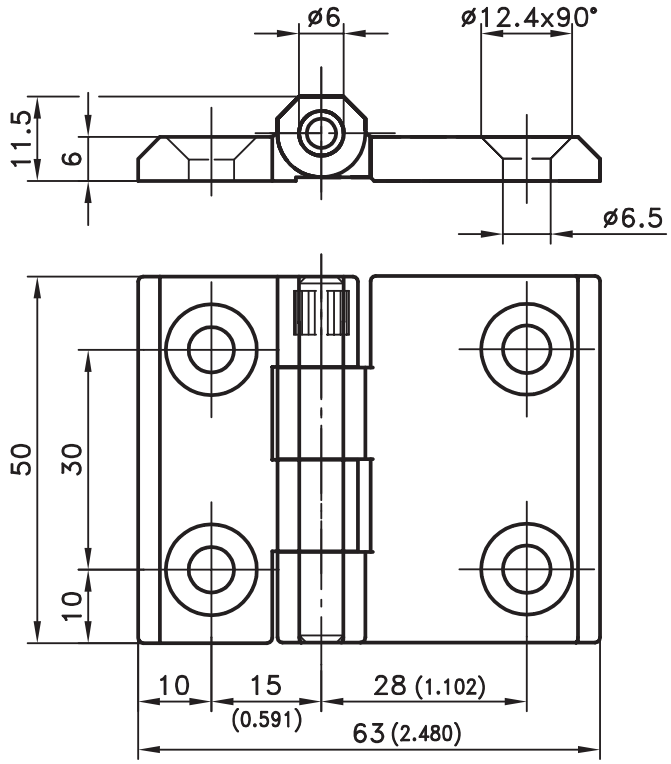

Part No. **218-9305**

Material:

- complete AISI 316

03/30/06

© copyright by DIRAK / Germany