NAPETOST VOLTAGE	240 V
FREKVENCA FREQUENCY	50/60 Hz (C1)
NAZIVNA MOČ NOMINAL POWER	1200 W

DVOJNA IZOLACIJA
DOUBLE INSULATED

Oznake natisnjene na SE
Information stamped on VCM

DOMEL 240 V
492.3.319 50/60 Hz (C2)
XXXX I.CL.F
CE

Prerez / Section A-A

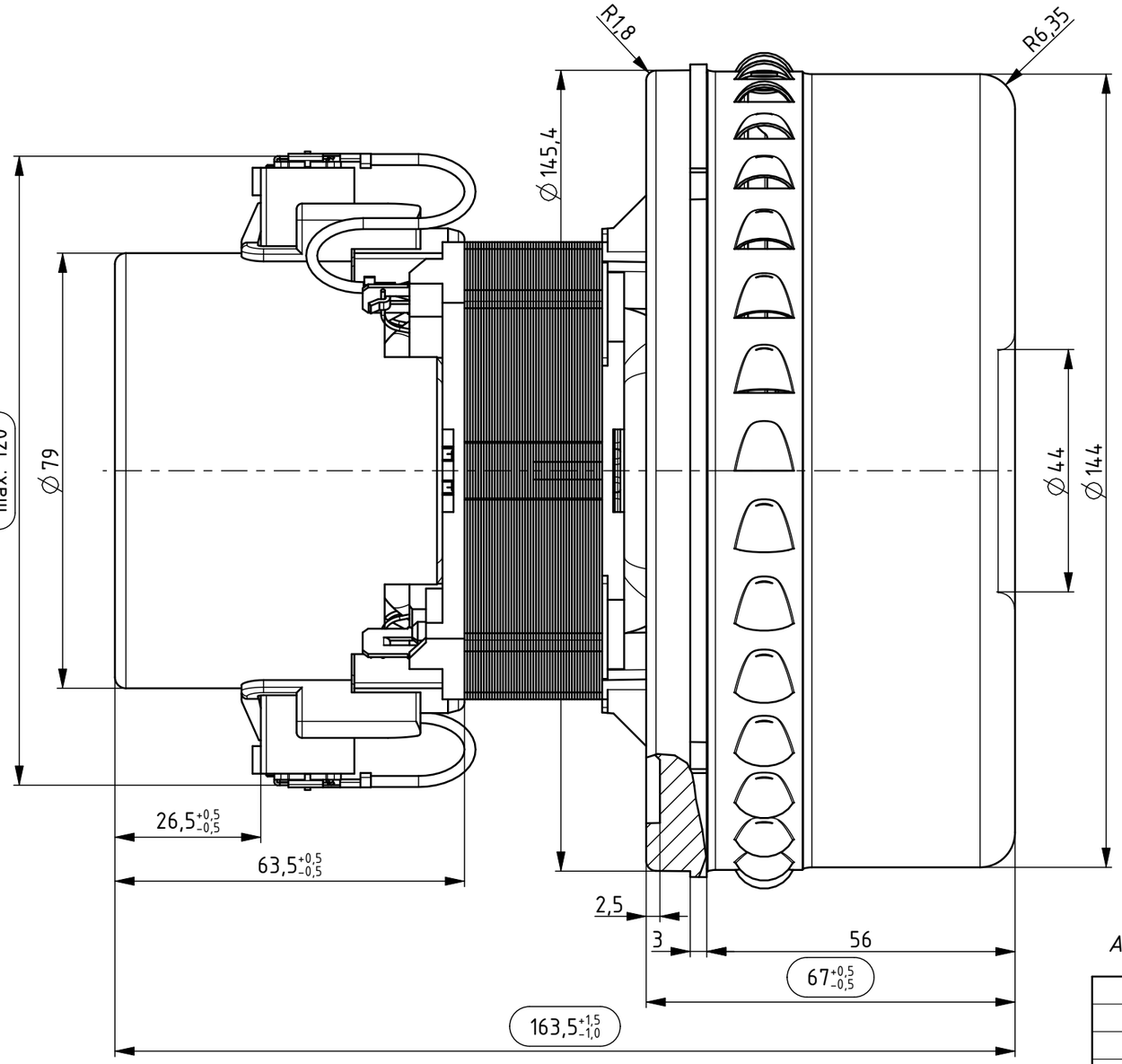

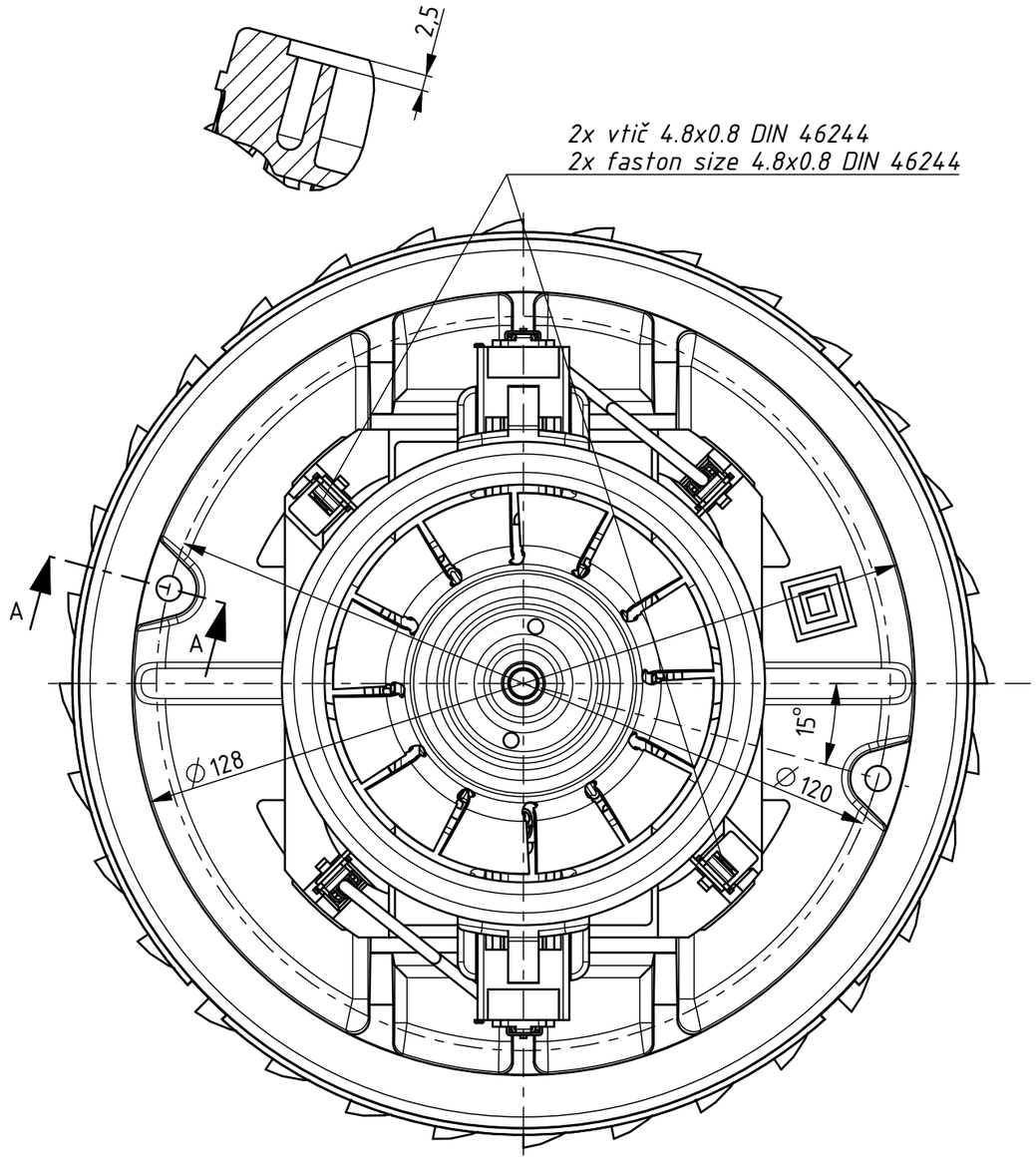

All dimensions in mm

(oval), * - pomembna mera
important dimension

OSNOVNE ZNAČILNOSTI		TYPICAL CHARACTERISTICS	
IZVEDBA	DVOSTOPENJSKA	FAN SYSTEM	TWO STAGE
VLEŽAJENJE	DVA KROGLIČNA LEŽAJA	BEARINGS	DUAL BALL
VRSTA PRETOKA	MIMO MOTORJA	DISCHARGE	BY PASS
SMER VRTENJA	LEVA	DIRECTION OF ROTATION	CCW

Ozn. Mark	Št. obvestila Nr. of notice	Datum Date	Ime Name
C2	13194	22.09.17	T. Čemažar
B1	8080	02.03.07	J. Luznar
A0	8064	02.02.07	J. Luznar

Tolerance odprtih mer / Tolerances without individual indications: ISO 8015, ISO 2768 - mK

Površinska hrapavost / Surface finishing

	Datum/Date	Ime/Name
Izdelal Designed	31.1.2007	J. Luznar
Pregl. Verified	22.09.17	J. Rihtaršič

DOMEL®
Otoki 21, 4228 Železniki, Slovenija

Merilo Scale: 1:1

Original format: ISO 5457 - A3

Gradivo / Material

Naziv Title: SESALNA ENOTA
VACUUM CLEANER MOTOR

Koda Code: 492.3.319

List Sheet: 3+

Stran Page: 1

4923319000_SESALNA_ENOTA

Izdelano s CAD/ProEngineer - ročno spreminjanje ni dovoljeno! Vsak prenos tretjim osebam ali uporaba v nedogovorjene namene ni dovoljena po zakonu o avtorskih pravicah.
Made with CAD/ProEngineer - changing is not allowed! Any unauthorized copying of this drawing or unauthorized distribution of the information contained herein is prohibited.